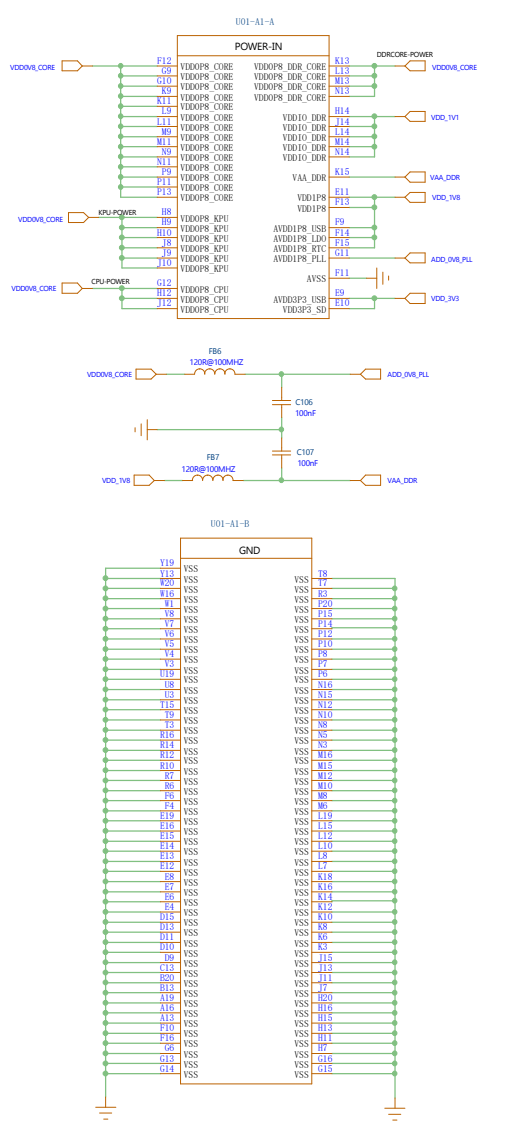

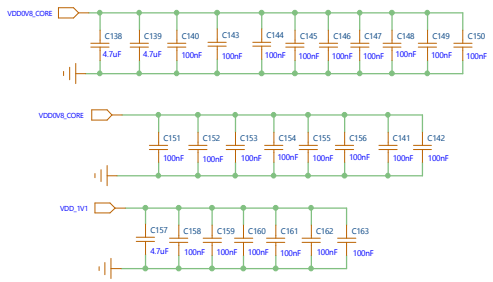

K230-A/B_I/O口_供电电路

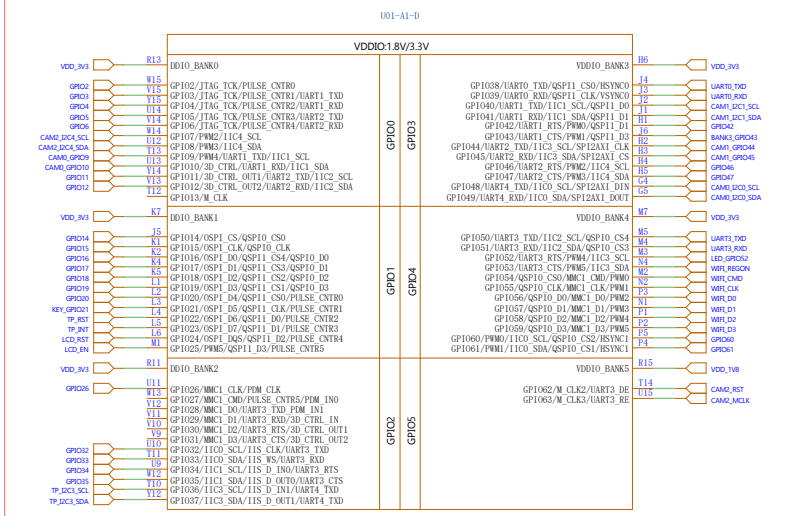

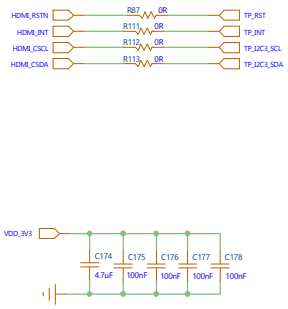

K230-D_I/O口_扩展口/WIFI驱动电路

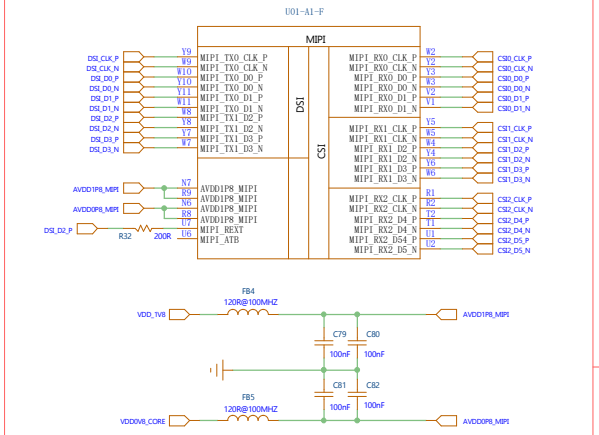

K230-F_ I/O口- MIPI/CAM部分电路

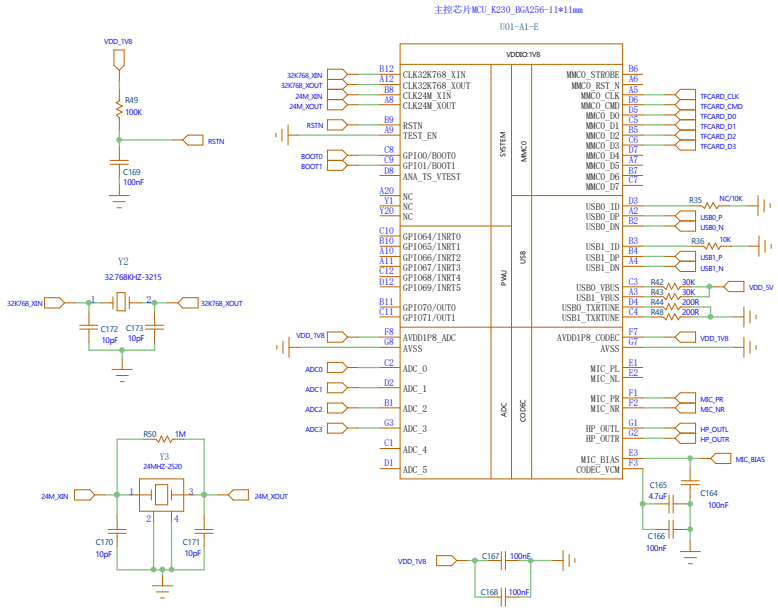

K230-E_I/O口_USB/TF卡/Audio部分电路

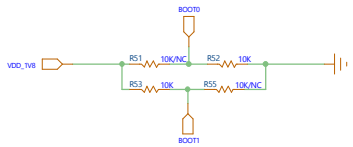

BOOT0=0,BOOT1=0,SPI NOR FLASH

BOOT0=1,BOOT1=0,SPI Nand Flash

BOOT0=0,BOOT1=0,MMC0

BOOT0=1,BOOT1=0,MMC1 **(SD Card)**

COMPANY:		TITLE:	幻尔科技有限公司
DRAWN: daijun	DATED: 2025.07.21	NAME:	K230 开发板原理图
CHECKED:	DATED:	CODE:	SIZE: C / DRAWING NO: K230-I/O / REV: V1.0
QUALITY CONTROL:	DATED:		
RELEASED:	DATED:	SCALE:	SHEET: 1 OF 6

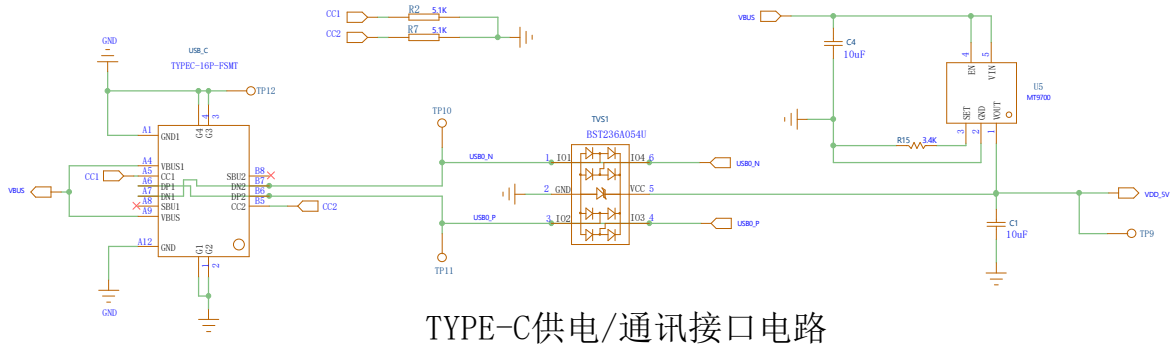

TYPE-C供电/通讯接口电路

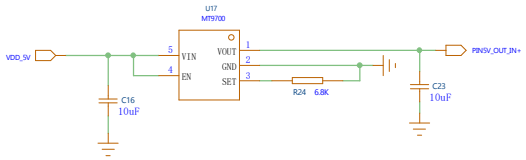

排针5V输出，只要PRE_VDD_5V有电就输出

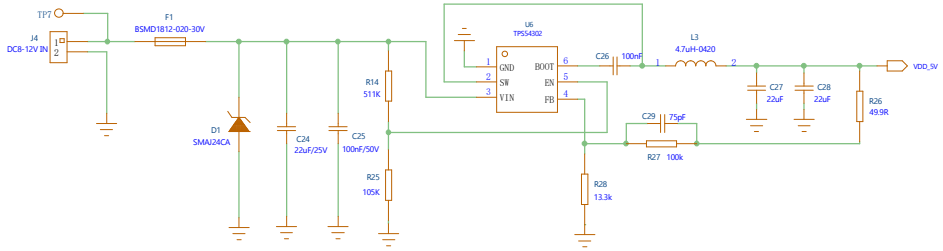

外部电源8-24V输入/DCDC降压供电接口电路

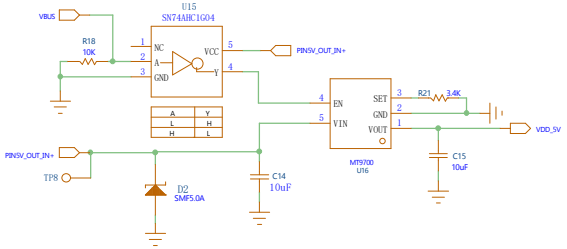

排针5V输入，当USB不供电时打开

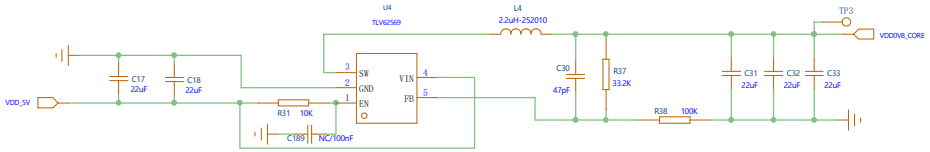

这里EN脚不用下地电容，其他地方加电容是为了延时供电

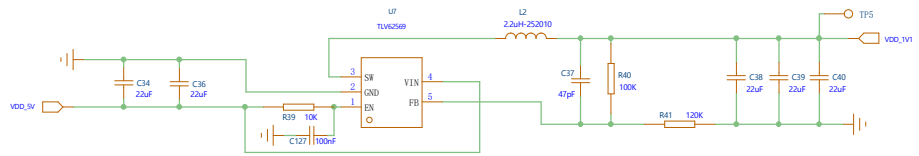

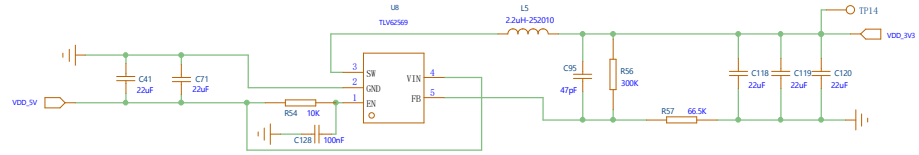

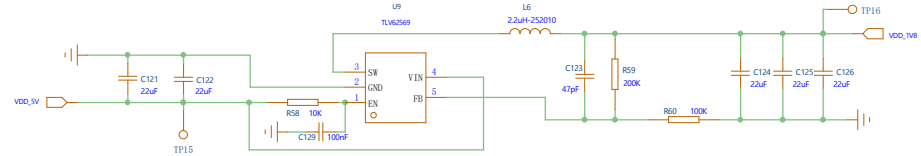

板载4路主电源供电电路

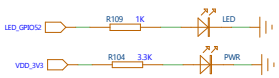

LED指示电源

		COMPANY: 幻尔科技有限公司			
		NAME: K230开发板原理图			
DRAWN: daijun	DATED: 2025.07.21	CODE:	SIZE: C	DRAWING NO: k230-TYPEC/POWER	REV: V1.0
CHECKED:	DATED:				
QUALITY CONTROL:	DATED:				
RELEASED:	DATED:	SCALE:		SHEET: 2 OF 6	

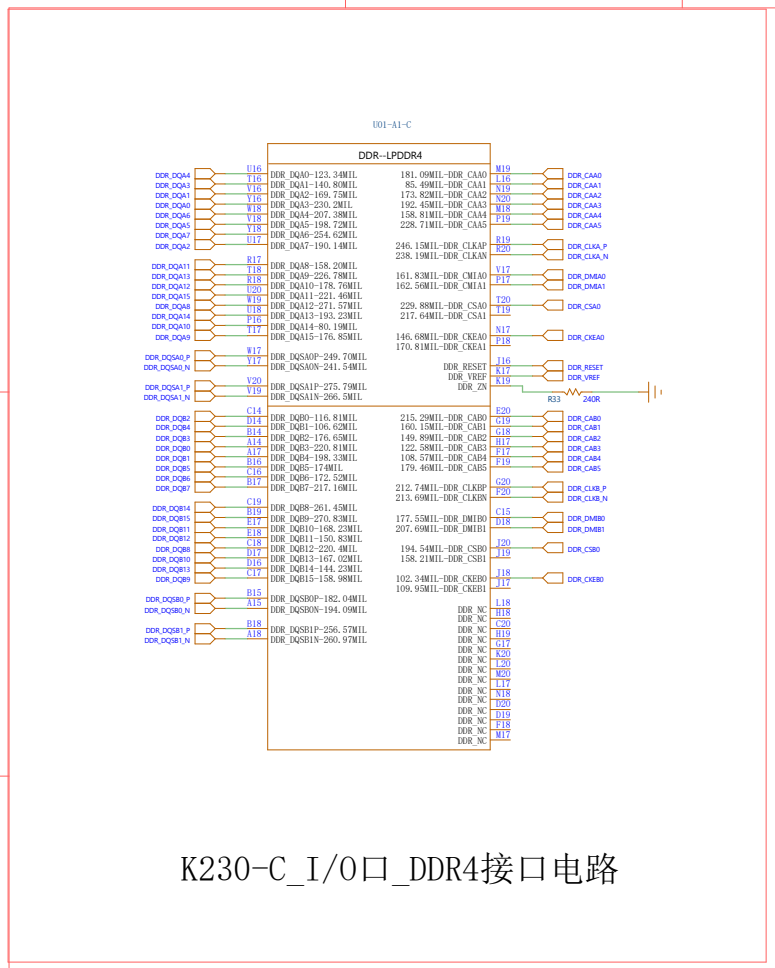

K230-C_I/O口_DDR4接口电路

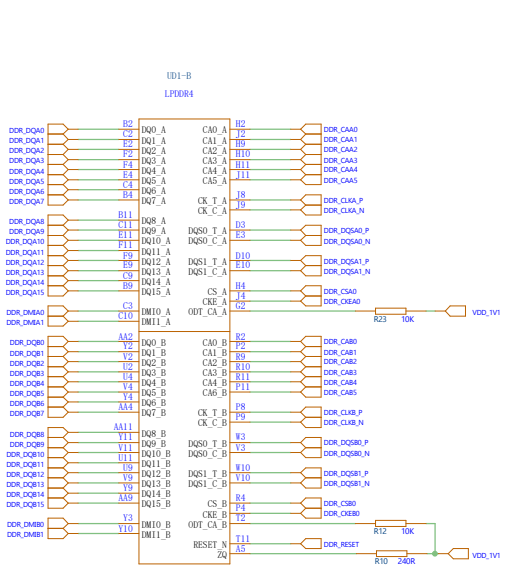

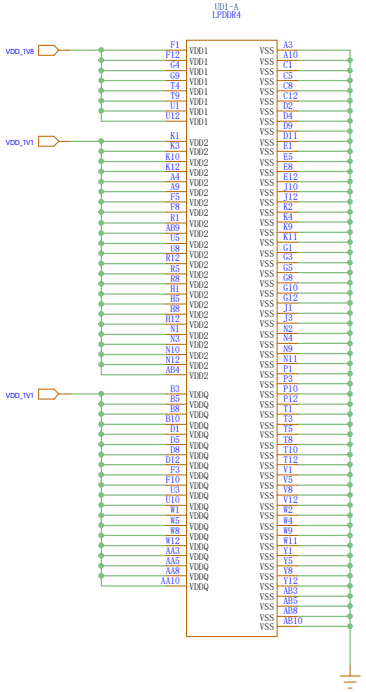

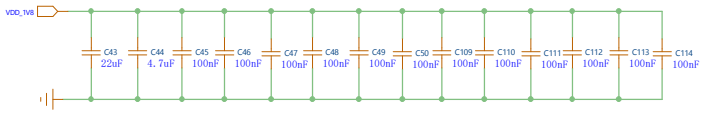

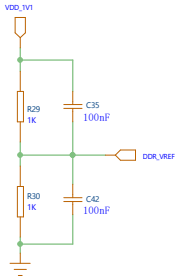

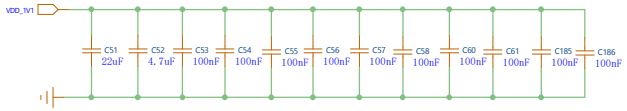

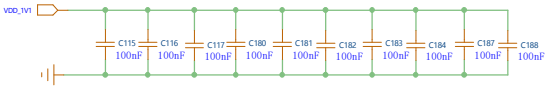

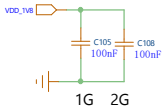

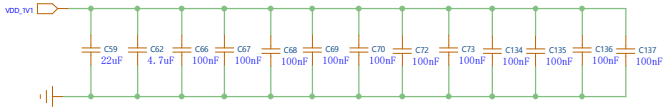

LPDDR4芯片接口电路

DRAWN: daijun	DATED: 2025.07.21	COMPANY: 幻尔科技有限公司	
CHECKED:	DATED:	NAME: K230开发板原理图	
QUALITY CONTROL:	DATED:	CODE:	SIZE: C
RELEASED:	DATED:	DRAWING NO: K230-LPDDR4	REV: V1.0
		SCALE:	SHEET: 3 OF 6

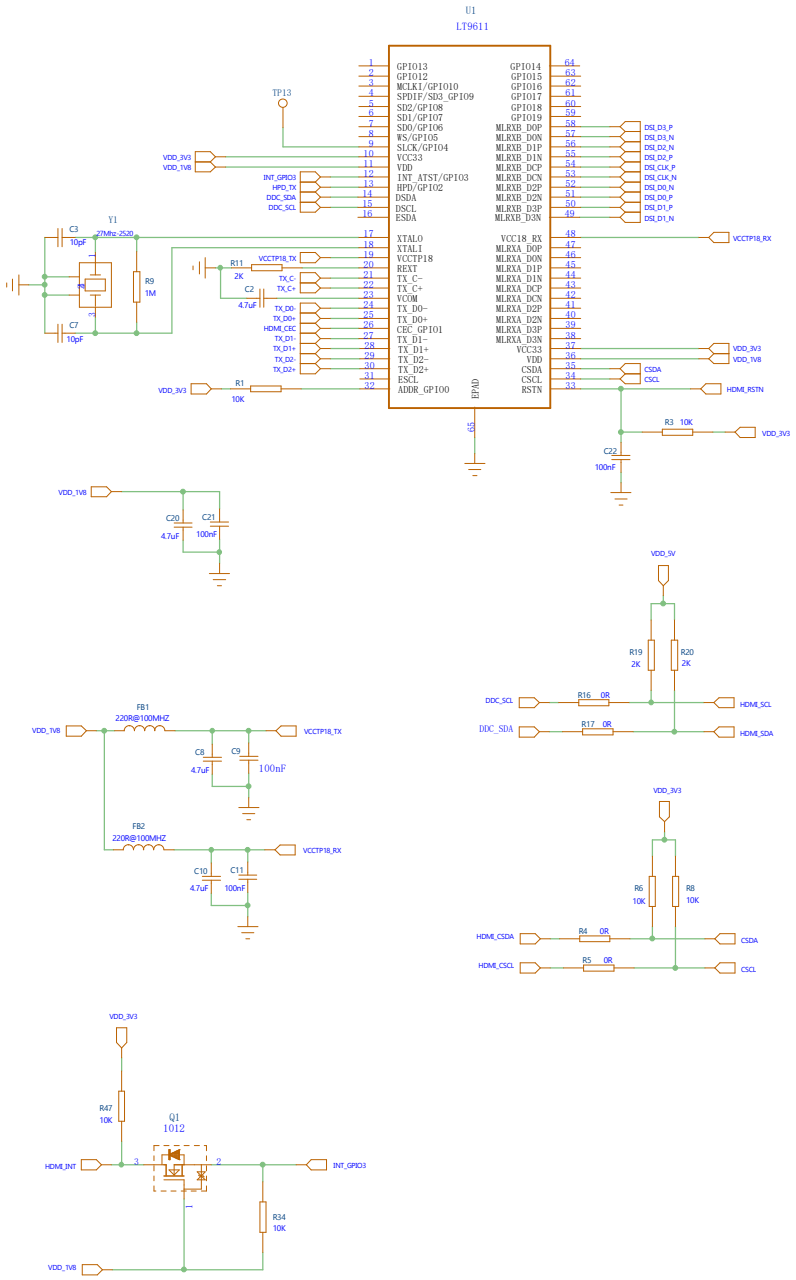

MIPI转HDMI电路

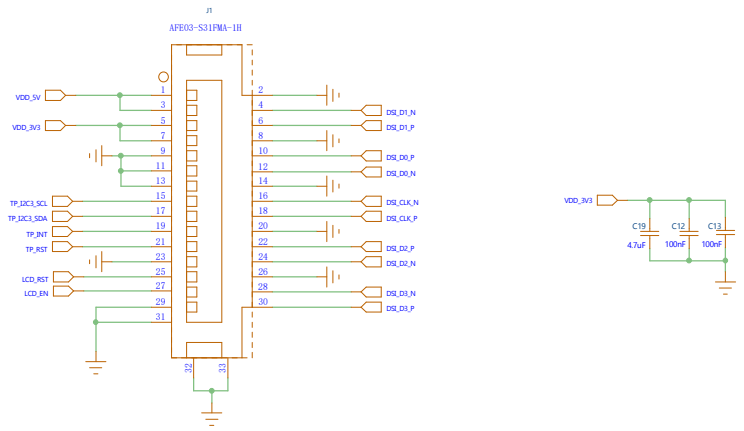

3.5寸(MIPI_LCD 800*480)接口电路

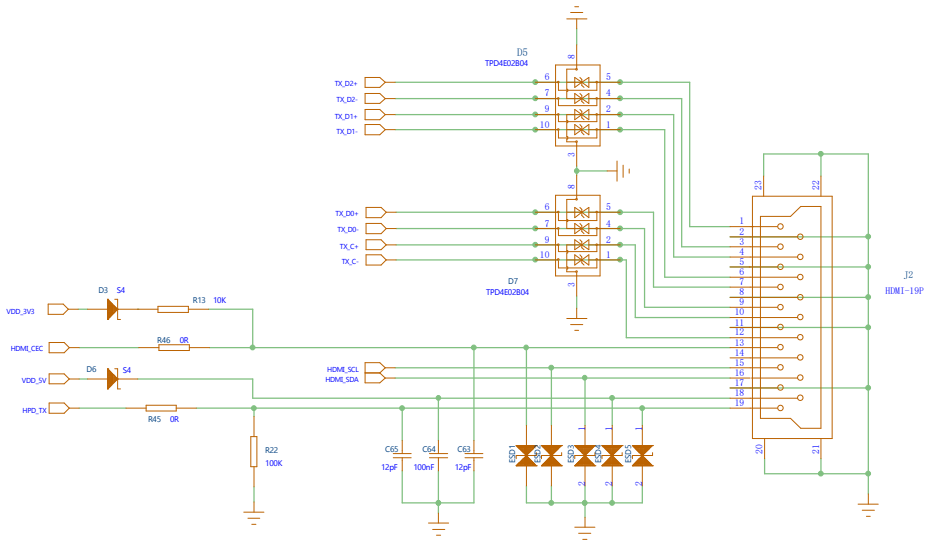

HDMI接口电路

COMPANY: 幻尔科技有限公司			
NAME: K230开发板原理图			
DRAWN: daijun	DATED: 2025.07.21		
CHECKED:	DATED:		
QUALITY CONTROL:	DATED:		
RELEASED:	DATED:		
CODE:	SIZE: C	DRAWING NO: K230-MDMI/DSI	REV: V1.0
SCALE:		SHEET: 4 OF 6	

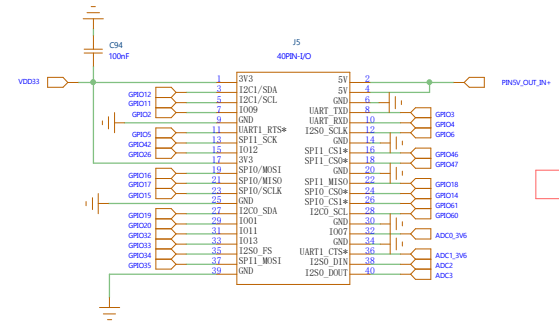

3.3V(1)	(2)5V
I2C2_SDA(3)	(4)5V
I2C2_SCL(5)	(6)GND
GPIO2(7)	(8)TX1
GND(9)	(10)RX1
GPIO5 (11)	(12)GPIO6
PWM0(13)	(14)GND
GPIO26(15)	(16)PWM3
3.3V(17)	(18)PWM3
SPI_MOSI(19)	(20)GND
SPI_MISO(21)	(22)GPIO18
SPI_CLK(23)	(24)SPIO_CS0
GND(25)	(26)SPIO_CS1
GPIO19(27)	(28)GPIO60
GPIO20(29)	(30)GNG
I2S_CLK(31)	(32)ADC0(0-3.6V)
I2S_WS(33)	(34)GND
I2S_DIN(35)	(36)ADC1(0-3.6V)
I2S_DOUT(37)	(38)ADC2(0-1.8V)
GND(39)	(40)ADC3(0-1.8V)

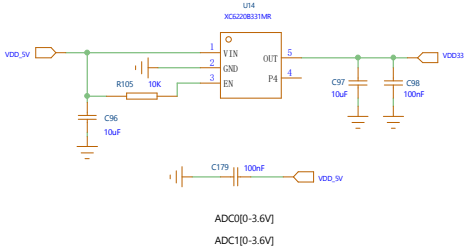

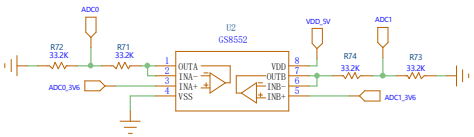

40Pin 扩展口电路

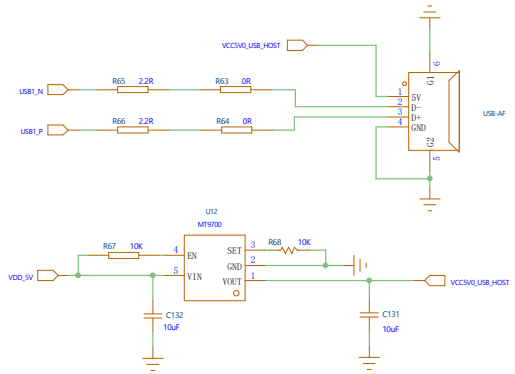

USB接口电路

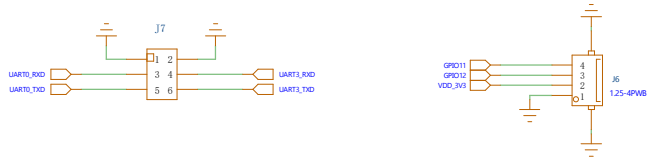

Debug/UART_I2C接口电路

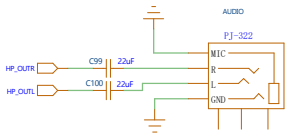

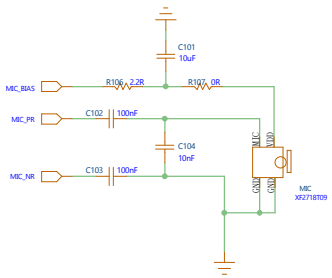

Audio_Jack/MIC电路

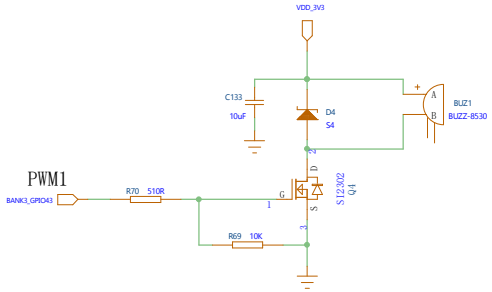

BUZZER(蜂鸣器)电路

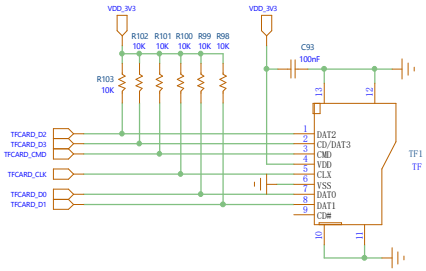

TF Card接口电路

COMPANY: 幻尔科技有限公司					
NAME: K230开发板原理图					
DRAWN: daijun	DATED: 2025.07.21	CODE:	SIZE: C	DRAWING NO: K230-TF/USB/40PIN/AUDIO	REV: V1.0
CHECKED:	DATED:				
QUALITY CONTROL:	DATED:				
RELEASED:	DATED:	SCALE:		SHEET: 5 OF 6	

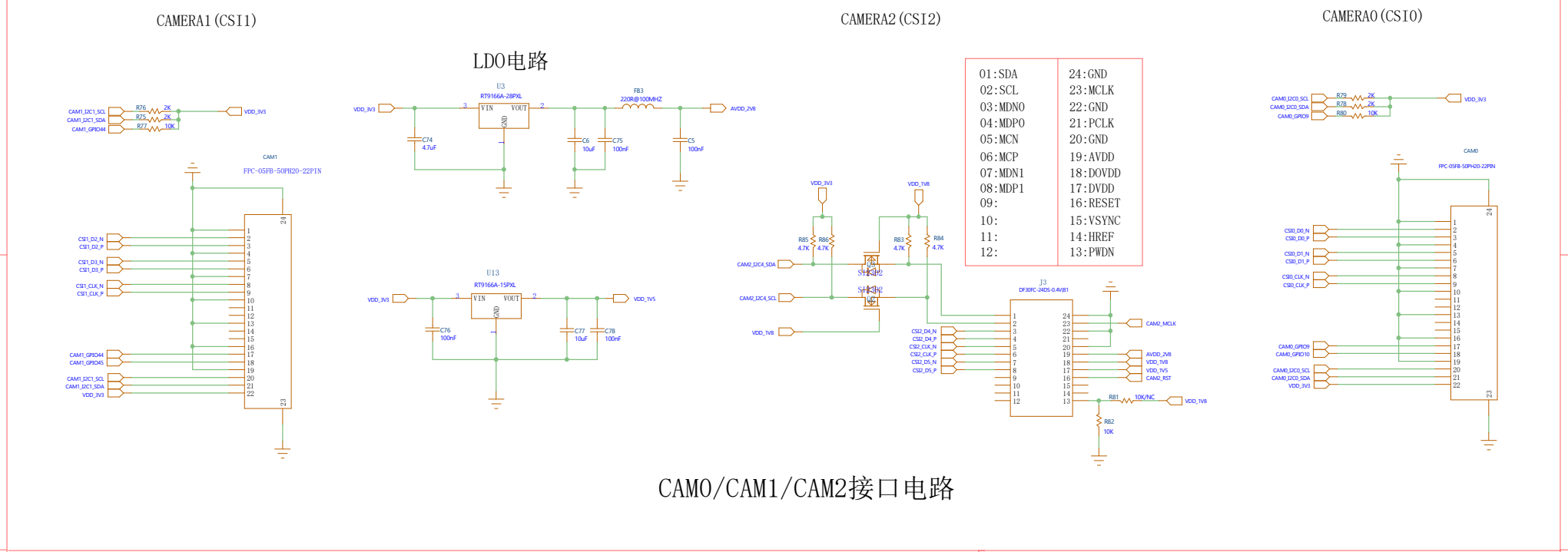

CAM0/CAM1/CAM2接口电路

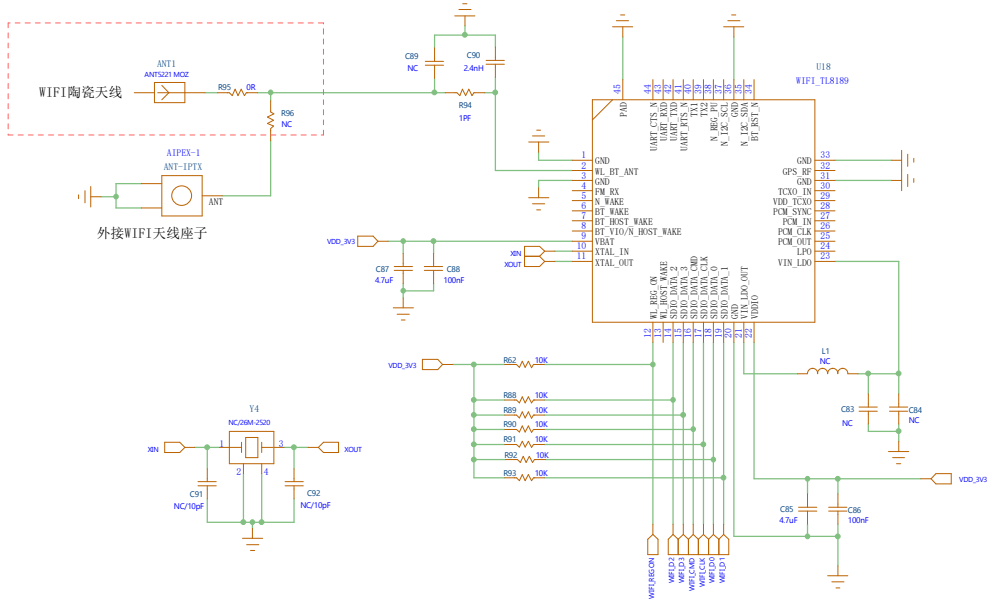

WIFI模组接口电路

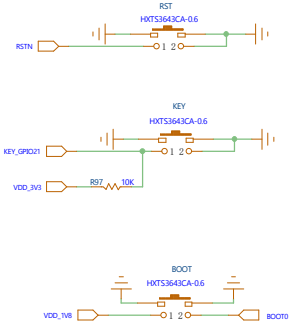

按键接口电路

DRAWN: daijun	DATED: 2025.07.21	COMPANY: 幻尔科技有限公司	
CHECKED:	DATED:	NAME: K230开发板原理图	
QUALITY CONTROL:	DATED:	CODE:	SIZE: C
RELEASED:	DATED:	DRAWING NO: K230-CAM/WIFI	REV: V1.0
		SCALE:	SHEET: 6 OF 6